AQA

Please write clearly in block capitals.

Centre number | | | | | |  Candidate number | | | | |

Surname _____

Forename(s) _____

Candidate signature _____
I declare this is my own work.

# GCSE
# COMBINED SCIENCE: SYNERGY

**H**

## Higher Tier  Paper 2  Life and Environmental Sciences

Thursday 25 May 2023  Morning  Time allowed: 1 hour 45 minutes

**Materials**
For this paper you must have:
- a ruler
- a protractor
- a scientific calculator
- the periodic table (enclosed)
- the Physics Equations Sheet (enclosed).

**Instructions**
- Use black ink or black ball-point pen. Pencil should only be used for drawing.
- Fill in the boxes at the top of this page.
- Answer **all** questions in the spaces provided. Do not write outside the box around each page or on blank pages.
- If you need extra space for your answer(s), use the lined pages at the end of this book. Write the question number against your answer(s).
- Do all rough work in this book. Cross through any work you do not want to be marked.
- In all calculations, show clearly how you work out your answer.

**Information**
- The maximum mark for this paper is 100.
- The marks for questions are shown in brackets.
- You are expected to use a calculator where appropriate.
- You are reminded of the need for good English and clear presentation in your answers.

| For Examiner's Use | |
|---|---|
| Question | Mark |
| 1 | |
| 2 | |
| 3 | |
| 4 | |
| 5 | |
| 6 | |
| 7 | |
| 8 | |
| **TOTAL** | |

Do not write outside the box

**0 1** All living organisms are made of cells.

**Figure 1** shows two types of cell.

**Figure 1**

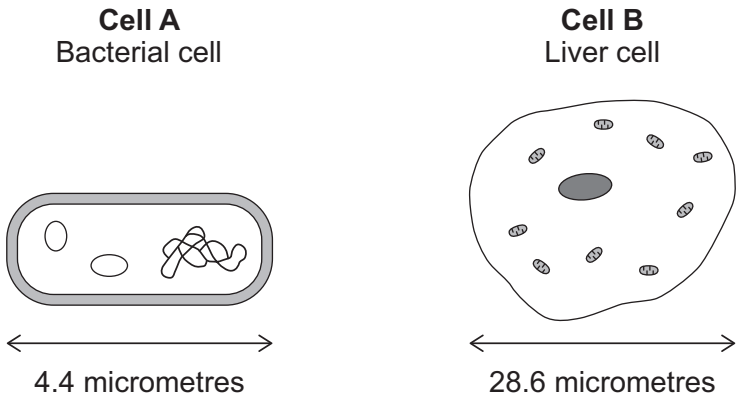


Not to scale

**0 1 . 1** Calculate how many times longer the liver cell is than the bacterial cell.

**[2 marks]**

_____

_____

Number of times longer = _____

Do not write outside the box

**0 1 . 2** Compare the structure of cell **A** with the structure of cell **B**.

You should include similarities and differences in your answer.

Do **not** refer to cell size.

**[4 marks]**

**0 1 . 3** In multicellular organisms, cells are organised into tissues.

What is meant by a 'tissue'?

**[1 mark]**

**Question 1 continues on the next page**

Do not write outside the box

A scientist investigated the effect of different concentrations of sugar solution on red blood cells.

**Figure 2** shows the effect of placing a red blood cell into a sugar solution.

**Figure 2**

Red blood cell **before** being placed in sugar solution

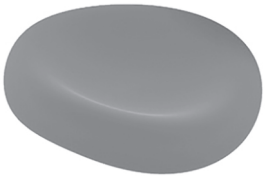

Red blood cell **after** being placed in sugar solution

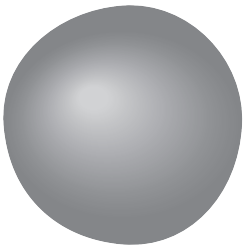

**0 1 . 4** What conclusion can be made from the result in **Figure 2**?

**[1 mark]**

Tick (✓) **one** box.

The sugar solution was less concentrated than inside the cell. ☐

The sugar solution was the same concentration as inside the cell. ☐

The sugar solution was more concentrated than inside the cell. ☐

Do not write outside the box

A student investigated the effect of different concentrations of sugar solution on the change in mass of plant tissue.

The student used pieces of potato.

**0 1 . 5** Describe a method the student could use to produce valid results.

**[6 marks]**

**Question 1 continues on the next page**

Do not write outside the box

The student used a valid method.

The student calculated the percentage change in mass of the pieces of potato.

**Table 1** shows the results.

**Table 1**

| **Concentration of sugar solution in mol/dm$^3$** | **Percentage (%) change in mass** |
|---|---|
| 0.0 | 28 |
| 0.1 | 15 |
| 0.2 | 3 |
| 0.3 | –5 |
| 0.4 | –10 |
| 0.5 | –12 |

**0 1 . 6** Complete **Figure 3**.

You should:

- plot the data from **Table 1**
- draw a line of best fit.

Some of the results have been plotted for you.

**[2 marks]**

Do not write outside the box

**Figure 3**

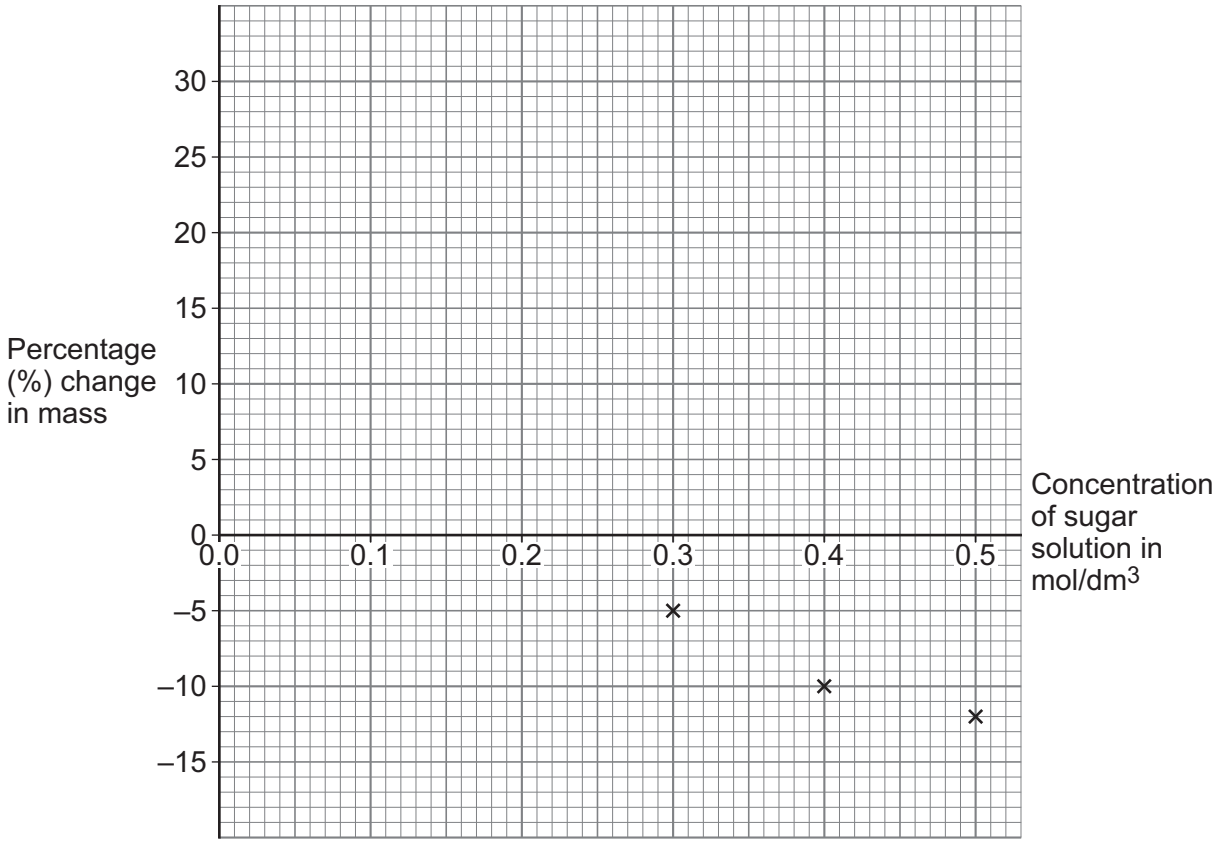


**0 1 . 7** Determine the concentration of sugar solution that would cause no change in the mass of a piece of the potato.

Use **Figure 3**.

**[1 mark]**

Concentration of sugar solution = _____ mol/dm$^3$

17

**Turn over for the next question**

Do not write outside the box

**0 2** A student investigated how the density of a liquid affects the position of a wooden block floating in the liquid.

**Figure 4** shows the apparatus.

**Figure 4**

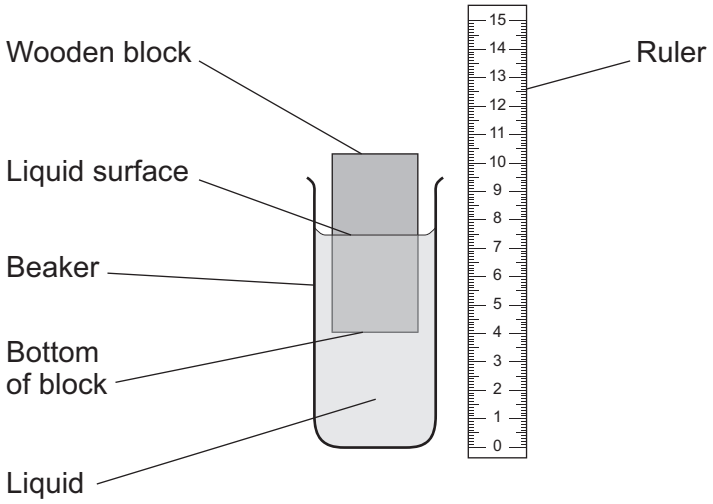


This is the method used.

1. Put the wooden block in the beaker of liquid.
2. Allow the wooden block to come to rest so that it is floating in the liquid.
3. Measure the distance between the liquid surface and the bottom of the block.
4. Repeat steps 1 to 3 with liquids of different densities.

**0 2 . 1** Give the independent variable in the investigation.

**[1 mark]**

_____

_____

Do not write outside the box

**0 2 . 2** Give **one** control variable for the investigation.

**[1 mark]**

_____

_____

**0 2 . 3** Give **one** possible source of error when the student measured the distance between the liquid surface and the bottom of the block.

**[1 mark]**

_____

_____

**0 2 . 4** **Table 2** shows the results.

**Table 2**

| Liquid | Density of liquid in $g/cm^3$ | Distance between liquid surface and bottom of the block in cm |
|---|---|---|
| **A** | 1.4 | 5.5 |
| **B** | 1.2 | 6.4 |
| **C** | 1.0 | 7.7 |
| **D** | 0.9 | 8.5 |

Give **one** conclusion from the results.

**[1 mark]**

_____

_____

**Question 2 continues on the next page**

Do not write outside the box

Use the Physics Equations Sheet to answer questions **02.5** and **02.6**.

**0 2 . 5** Which equation links density ($\rho$), mass ($m$) and volume ($V$)?

**[1 mark]**

Tick (✓) **one** box.

$\rho = m \times V$ ☐

$\rho = \frac{m}{V}$ ☐

$\rho = m \times V^3$ ☐

$\rho = \frac{V}{m}$ ☐

**0 2 . 6** The density of the wooden block was 0.85 g/cm$^3$.

The mass of the wooden block was 30.6 g.

Calculate the volume of the wooden block in cm$^3$.

**[3 marks]**

_____

_____

_____

_____

_____

Volume of wooden block = _____ cm$^3$

Do not write outside the box

**0 2 . 7** Liquid **C** is water.

When liquid water is heated to its boiling point the water changes state.

What happens to the density of the liquid water as it changes state?

**[2 marks]**

Tick (✓) **one** box.

The density decreases ☐

The density stays the same ☐

The density increases ☐

Give a reason for your answer.

_____

_____

10

**Turn over for the next question**

Do not write outside the box

**0 3** The small intestine (gut) is adapted to digest and absorb food molecules.

Digested food molecules pass across the wall of the small intestine into the blood.

**Figure 5** shows part of the wall of the small intestine.

**Figure 5**

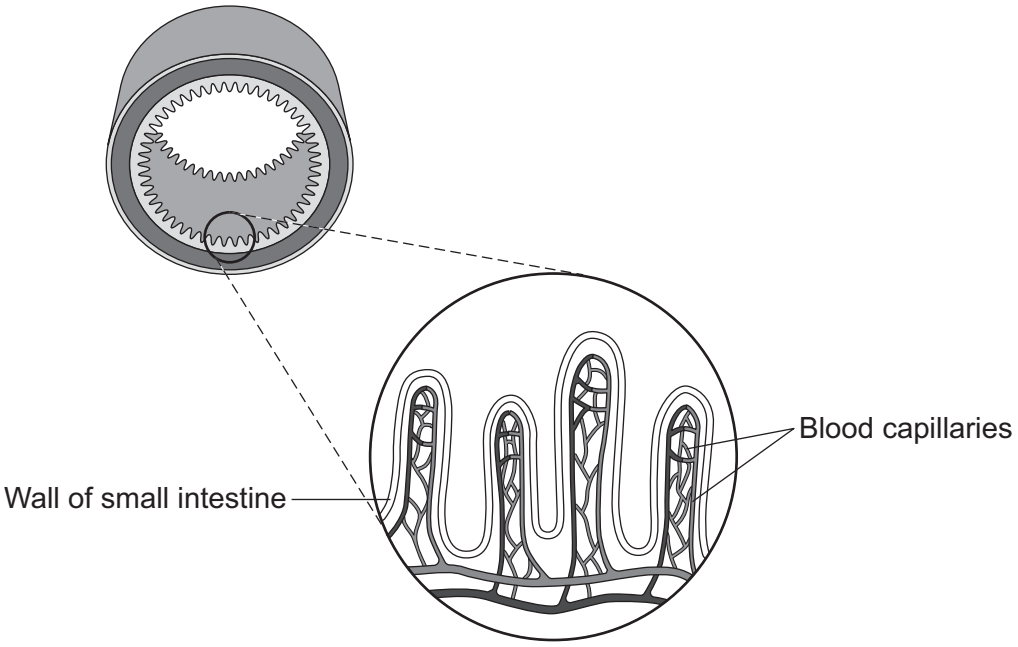

Do not write outside the box

**0 3 . 1** The small intestine is adapted to increase the efficiency of absorption of digested food.

Two adaptations of the small intestine are:

- a thin wall
- a constant blood flow through the capillaries.

Describe how each adaptation allows the efficient absorption of digested food.

**[2 marks]**

Thin wall _____

_____

_____

Constant blood flow _____

_____

_____

**Question 3 continues on the next page**

Do not write outside the box

A student used partially permeable tubing to make a model of a human small intestine.

**Figure 6** shows the apparatus used.

**Figure 6**

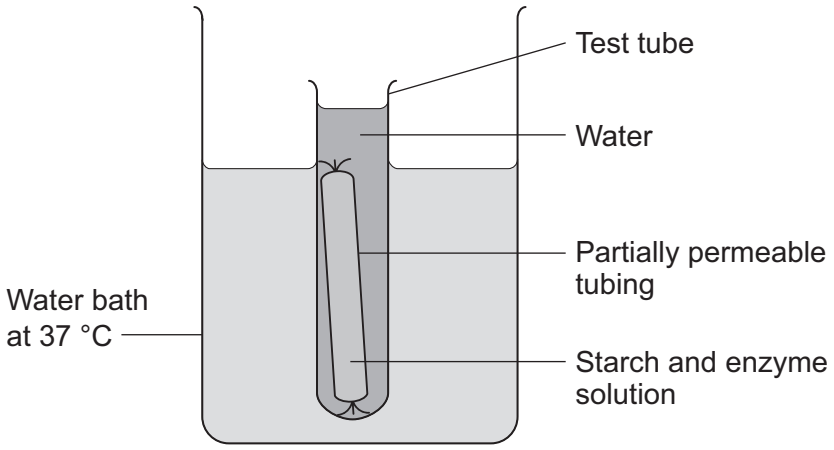


This is the method used.

1. Add starch and enzyme solution to the tubing.
2. Take a sample of the mixture from inside the tubing and a sample of the water from the test tube. Test each sample:
   - using the iodine test
   - using the Benedict's test.
3. Place the test tube into a water bath at 37 °C.
4. Repeat step 2 after 30 minutes.

Do not write outside the box

**0 3 . 2** What type of enzyme breaks down starch?

**[1 mark]**

_____

**0 3 . 3** The water bath was kept at 37 °C.

Explain why 37 °C was the most suitable temperature for the investigation.

**[2 marks]**

_____

_____

_____

_____

**Question 3 continues on the next page**

Do not write outside the box

**Table 3** shows the results.

**Table 3**

| Test | Sample tested | Result of iodine test | Result of Benedict's test |
|---|---|---|---|
| **1** | Mixture inside tubing at start | ✓ | ✗ |
| **2** | Water from test tube at start | ✗ | ✗ |
| **3** | Mixture inside tubing after 30 minutes | ✓ | ✓ |
| **4** | Water from test tube after 30 minutes | ✗ | ✓ |

**Key**

✗ negative test result

✓ positive test result

**0 3 . 4** Explain the results for test **3**.

**[2 marks]**

_____

_____

_____

_____

**0 3 . 5** Explain the results for test **4**.

**[3 marks]**

_____

_____

_____

_____

_____

_____

10

Do not write outside the box

**0 4** Pollutants in the atmosphere can be harmful to the environment and to human health.

Four pollutants in the atmosphere are:

- carbon monoxide
- oxides of nitrogen
- particulates
- sulfur dioxide.

**0 4 . 1** Describe how carbon monoxide is produced from hydrocarbon fuels.

**[1 mark]**

_____

_____

**0 4 . 2** Describe **one** harmful effect of oxides of nitrogen.

**[1 mark]**

_____

_____

**Question 4 continues on the next page**

Do not write outside the box

**Figure 7** shows the emissions of three atmospheric pollutants from 1970 to 2019.

**Figure 7**

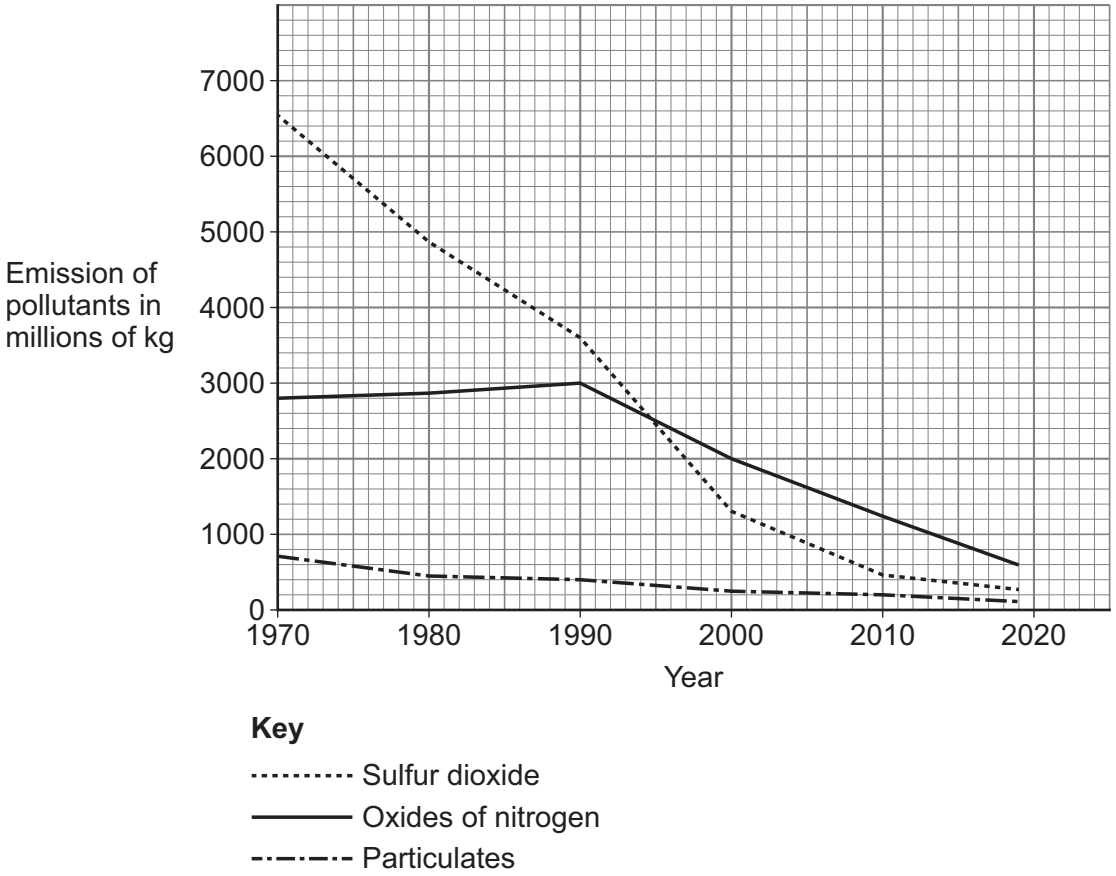


**0 4 . 3** Determine the percentage change in emission of oxides of nitrogen from 1970 to 2019.

Give your answer to 2 significant figures.

**[4 marks]**

Percentage change (2 significant figures) = _____ %

Do not write outside the box

**0 4 . 4** Compare the changes in the emission of atmospheric pollutants from 1970 to 2019.

You should refer to:

- sulfur dioxide
- oxides of nitrogen
- particulates.

Use **Figure 7**.

**[3 marks]**

**0 4 . 5** Suggest **one** reason for the change in the emission of atmospheric pollutants shown in **Figure 7**.

**[1 mark]**

**Question 4 continues on the next page**

Do not write outside the box

Particulates are classified into different groups depending on diameter of the particulate.

**Table 4** shows information about the different groups.

**Table 4**

| Particulate group | Particulate diameter in micrometres |
|---|---|
| $PM_{10}$ | >2.5 and <10 |
| $PM_{2.5}$ | >0.1 and <2.5 |
| $PM_{0.1}$ | <0.1 |

Do not write outside the box

**0 4 . 6** A soot particle was viewed using a microscope.

The magnification used was × 5000.

The diameter of the image of the soot particle was 7.5 mm.

Determine the particulate group of the soot particle.

1 mm = 1000 micrometres

Use **Table 4**.

**[5 marks]**

Real diameter of soot particle = _____ micrometres

Particulate group.

Tick (✓) **one** box.

$PM_{10}$ ☐ $PM_{2.5}$ ☐ $PM_{0.1}$ ☐

**Question 4 continues on the next page**

Do not write outside the box

**0 4 . 7** Particulates in the air can be breathed in.

The body's defences prevent particulates larger than 10 micrometres getting into the lungs.

Describe how the body prevents the particulates reaching the lungs **and** removes the particulates from the airways.

**[3 marks]**

_____

_____

_____

_____

_____

_____

18

Do not write outside the box

**Turn over for the next question**

**DO NOT WRITE ON THIS PAGE**
**ANSWER IN THE SPACES PROVIDED**

Do not write outside the box

**0 5** In managed forests:

- tree seedlings are regularly planted
- some trees are regularly removed.

**0 5 . 1** Some of the young trees in a managed forest are removed every year.

The biomass of wood produced by the remaining trees in the forest is increased by removing the young trees.

Explain why.

**[2 marks]**

**0 5 . 2** Explain how the processes of photosynthesis and respiration in a tree are involved in the production of new biomass for the tree.

**[5 marks]**

Do not write outside the box

**0 5 . 3** Planting trees to maintain forests is good for the environment.

Explain the environmental **and** biological benefits of maintaining forests.

**[6 marks]**

13

**Turn over for the next question**

Do not write outside the box

**0 6** Bees have a simple nervous system.

The bee nervous system has similar features to the human nervous system.

The bee's antenna is a sense organ.

**Figure 8** shows a bee feeding on a flower.

**Figure 8**

Bees feed on sugar solution produced by the flowers of plants.

Do not write outside the box

**0 6 . 1** When an antenna of a bee touches sugar solution the bee automatically sticks out its tongue. This response is a reflex action.

Describe the nervous pathway for the reflex action.

**[5 marks]**

**Question 6 continues on the next page**

Do not write outside the box

Some species of flowers produce sugar solution that contains the chemical caffeine.

A scientist investigated the effect of caffeine on the feeding behaviour of bees.

The investigation was carried out in a laboratory.

This is the method used.

1. Feed 15 newly hatched bees on sugar solution for 24 hours.
2. Release the bees.
3. Record the number of visits made by the bees to a feeder containing sugar solution in 3 hours.
4. Repeat steps 2 and 3 for a further 2 days.

The scientist then took another 15 newly hatched bees and repeated the same method using a sugar and caffeine solution.

**Table 5** shows the results.

**Table 5**

| **Content of feeder** | **Mean number of visits in 3 hours per bee** | | |
|---|---|---|---|
| | **Day 1** | **Day 2** | **Day 3** |
| Sugar solution | 18 | 11 | 4 |
| Sugar and caffeine solution | 23 | 20 | 12 |

**0 6 . 2** The scientist controlled the concentration of the solutions.

Give **one** other variable that should have been a control variable in the investigation.

**[1 mark]**

_____

_____

Do not write outside the box

**0 6 . 3** The scientist concluded that:

'Caffeine affects the feeding behaviour of bees.'

Evaluate the scientist's conclusion.

Use data from **Table 5** and information from the method.

**[4 marks]**

_____

_____

_____

_____

_____

_____

_____

_____

10

**Turn over for the next question**

Do not write outside the box

**0 7** Ultraviolet waves and visible light waves are types of radiation in the electromagnetic spectrum.

**0 7 . 1** How does the frequency of ultraviolet waves compare with the frequency of visible light waves?

**[1 mark]**

Tick (✓) **one** box.

- The frequency of ultraviolet waves is higher than the frequency of visible light waves. ☐
- The frequency of ultraviolet waves is the same as the frequency of visible light waves. ☐
- The frequency of ultraviolet waves is lower than the frequency of visible light waves. ☐

**0 7 . 2** An ultraviolet wave has a wavelength of 340 nanometres.

speed of electromagnetic radiation = $3.0 \times 10^8$ m/s

Calculate the frequency of the ultraviolet wave.

Use the Physics Equations Sheet.

**[4 marks]**

_____

_____

_____

_____

_____

_____

_____

Frequency = _____ Hz

Do not write outside the box

**0 7 . 3** **Figure 9** shows the wavefronts of a visible light wave passing from air into a liquid.

**Figure 9**

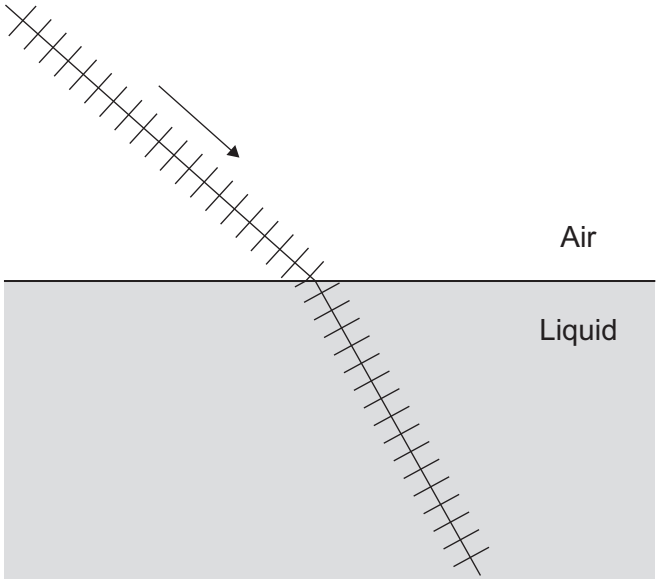


Explain why the wave refracts as it passes from the air into the liquid.

**[3 marks]**

_____

_____

_____

_____

_____

_____

8

**Turn over for the next question**

Do not write outside the box

**There are no questions printed on this page**

**DO NOT WRITE ON THIS PAGE**
**ANSWER IN THE SPACES PROVIDED**

Do not write outside the box

**0 8** **Figure 10** shows a rock pool on a sea shore.

Rock pools are flooded twice a day with fresh sea water.

**Figure 10**

**0 8 . 1** What is the community of the rock pool?

**[1 mark]**

Tick (✓) **one** box.

- The living organisms and abiotic factors in the rock pool ☐
- The number of different species in the rock pool ☐
- The number of predators and prey in the rock pool ☐
- The populations of all the species that live in the rock pool ☐

**Question 8 continues on the next page**

Do not write outside the box

Starfish are animals that live in rock pools.

A scientist investigated the effect that starfish had on the number of species in rock pools.

This is the method used.

1. Count the number of species in rock pool **A** and in rock pool **B**.

2. Regularly remove all the starfish from rock pool **B**.

3. Count the number of species in rock pool **A** and in rock pool **B** each year for 10 years.

**Figure 11** shows the results.

**Figure 11**

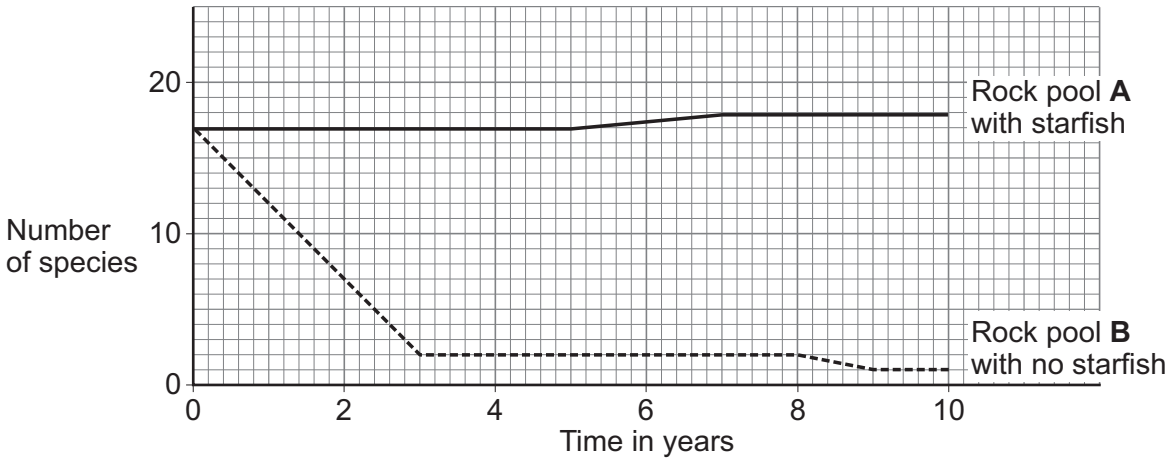


**Figure 12** shows a food web in the rock pools.

**Figure 12**

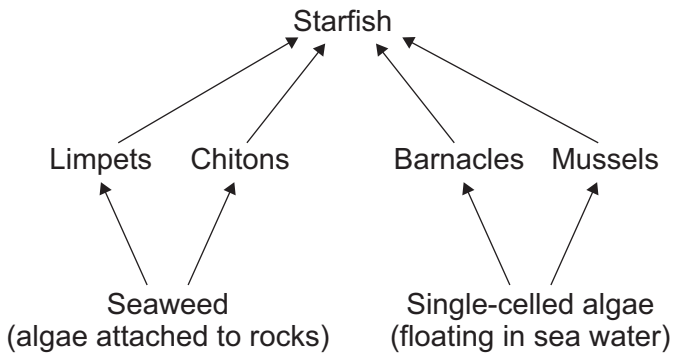

Do not write outside the box

Starfish usually prefer to feed on mussels.

Mussels reproduce and grow more quickly than limpets, chitons, and barnacles.

**0 8 . 2** After 10 years the only species left in rock pool **B** was mussels.

Explain the results shown in **Figure 11** for rock pool **B**.

Use **Figure 11** and **Figure 12**.

**[6 marks]**

**0 8 . 3** Explain the results shown in **Figure 11** for rock pool **A**.

**[2 marks]**

**Question 8 continues on the next page**

Do not write outside the box

Some species of starfish can reproduce by cloning (asexual reproduction) and also by sexual reproduction.

**Figure 13** shows what happens when starfish **P** reproduces by each type of reproduction.

**Figure 13**

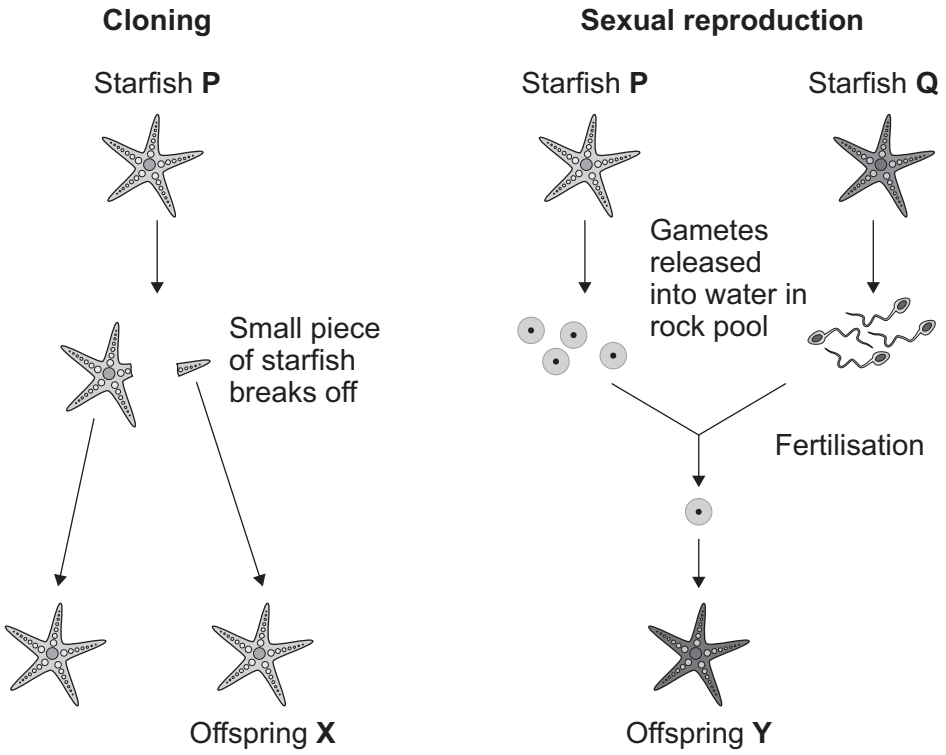

Do not write outside the box

**0 8 . 4** During cloning a small piece of the starfish develops into a new starfish.

Before cell division, chromosomes replicate and the number of organelles increases.

Describe the stages in the process of cell division that produces offspring **X**.

**[3 marks]**

**0 8 . 5** Explain **one** advantage to the starfish of reproducing by cloning rather than reproducing by sexual reproduction.

**[2 marks]**

14

**END OF QUESTIONS**

Do not write outside the box

**There are no questions printed on this page**

**DO NOT WRITE ON THIS PAGE**
**ANSWER IN THE SPACES PROVIDED**

Do not write outside the box

| Question number | Additional page, if required.<br>Write the question numbers in the left-hand margin. |
|---|---|
| | |

Do not write outside the box

| Question number | Additional page, if required.<br>Write the question numbers in the left-hand margin. |
|---|---|
| | |

Do not write outside the box

| Question number | Additional page, if required.<br>Write the question numbers in the left-hand margin. |
|---|---|
| | |

Do not write outside the box

| Question number | Additional page, if required.<br>Write the question numbers in the left-hand margin. |
|---|---|
| | |

Do not write outside the box

**There are no questions printed on this page**

**DO NOT WRITE ON THIS PAGE**
**ANSWER IN THE SPACES PROVIDED**

Do not write outside the box

**There are no questions printed on this page**

**DO NOT WRITE ON THIS PAGE**
**ANSWER IN THE SPACES PROVIDED**

**Copyright information**

For confidentiality purposes, all acknowledgements of third-party copyright material are published in a separate booklet. This booklet is published after each live examination series and is available for free download from www.aqa.org.uk.

Permission to reproduce all copyright material has been applied for. In some cases, efforts to contact copyright-holders may have been unsuccessful and AQA will be happy to rectify any omissions of acknowledgements. If you have any queries please contact the Copyright Team.

Copyright © 2023 AQA and its licensors. All rights reserved.